Rio Single Arm

Description / Description/ Descripción

Lamp / Lampe / Lámpara	GX53 / LED dot
Power / Puissance / Potencia	-
Flux / Flux / Flujo	-
Colour t. / T. couleur / T. color	-
Angle / Angle / Ángulo	-
CRI / IRC / IRC	
IP / IP / IP	IP20
Protocol / Protocole / Protocolo	On-off
Driver / Driver / Controlador	-
Voltage / Voltage / Voltaje	220-240V
Guarantee / Garantie / Garantía	3 years / 3 ans / 3 años

Materials / Matériaux / Materiales

Iron structure and textile cable.
Structure en fer et câble textile.
Estructura de hierro y cable textil.

Lamp / Lampe / Lámpara

Ref. 11840	GX53 2700K
Ref. 11857	GX53 3000K
Ref. 11864	LED dot 2700K On/Off
Ref. 11888	LED dot 3000K On/Off
Ref. 11871	LED dot 2700K Dali
Ref. 11895	LED dot 3000K Dali

Finishes / Finitions / Acabados

- White / Blanc / Blanco
  Ref. 00882
- Yellow / Jaune / Amarillo
  Ref. 10164
- Terracotta / Terre cuite / Terracota
  Ref. 10171
- Red / Rouge / Rojo
  Ref. 00899
- Green / Vert / Verde
  Ref. 10157
- Blue / Bleu / Azul
  Ref. 10188
- Black / Noir / Negro
  Ref. 00875
- Custom (MOQ required, please check) / Personnalisé (MOQ requis, consulter) / Personalizado (Requiere MOQ, consultar)
  Ref. 02220

Certificates / Certificats / Certificados

CE
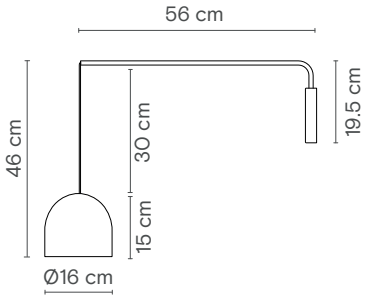
Dimensions / Dimensions / Dimensiones